Solent
CEILING FANS
A breath of fresh air

RemoteL5

INSTALLATION INSTRUCTIONS

RemoteL5 - Fan Five Speed with Light On/Off

Transmitter Functions

- Fan Off
1. Fan On - Slow
2. Fan On - Low
3. Fan On - Medium
4. Fan On - Medium High
5. Fan On - High
- Light On/Off

Transmitter & Receiver Pairing

Pairing 1 Transmitter to 1 Receiver (Single Fan)

1. Switch ON the Isolator/Light Switch for the fan.
2. Within 30 seconds of switching the Isolator/Light Switch ON, press the FAN OFF button until the fan starts rotating and the light on the fan flashes.
3. Pairing is now complete.

Pairing 1 Transmitter to Multiple Receivers (Multiple Fans)

1. Each fan must be paired individually and must have its own Receiver and own Isolator/Light Switch.
2. Start pairing by switching the Isolators/Light Switches OFF for all the fans.
3. Switch ON the Isolator/Light Switch for the fan you are pairing.
4. Within 30 seconds of switching the Isolator/Light Switch ON, press the FAN OFF button until the fan starts rotating and the light on the fan flashes.
5. Pairing is now complete for that fan.
6. Switch OFF the Isolator/Light Switch for the fan you have just paired, this will store it to memory.
7. Move to the next fan, using the same Transmitter, perform points 1 to 5 to pair the 2nd fan. Use this method to pair each fan until all fans are paired.

Important

1. The Isolator/Light Switch for the fans that have already been paired must be in the OFF setting to retain the memory.
2. Pairing of 1 Transmitter to Multiple Receivers cannot happen if all the fans are connected to one Isolator/ Light Switch. In this scenario a multiple fan wall controller can be used instead of a Remote Control.

Timer Function

1. There are 5 Timers – 1 hour, 2 hours, 4 hours, 6 hours and 8 hours.
2. The Timer must be set while the fan is in rotation and it can be set on any speed.
3. Press the desired Timer to put the fan in sleep mode and the fan will turn off when the selected Timer is reached.
4. To cancel a timer selection press the Off button or any of the 5 speed buttons.

Receiver Connection

1. Connect the RECEIVER as shown in wiring diagram.

Receiver Placement

1. Once the connection is made, place the RECEIVER in the canopy, slide the canopy up and tighten in position.

Receiver Memory Function

1. **After a power outage** or a tripped circuit breaker, the **fan will default to Light OFF and Fan ON.** The fan will run at the speed that was last saved in memory.

TRANSMITTER

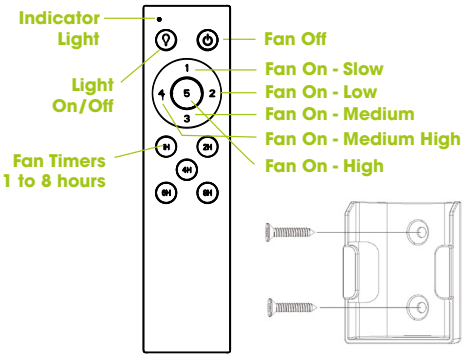

Installation of TransmitterWall Mount Holderwith two screws

RECEIVER CONNECTION

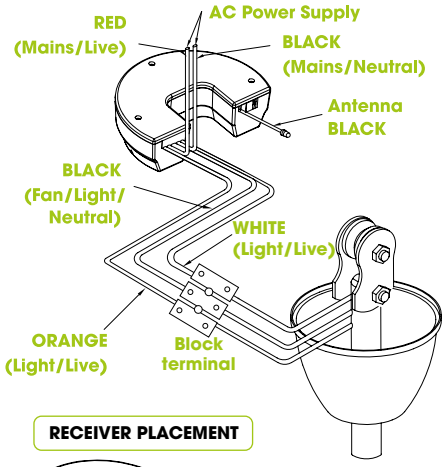

RECEIVER PLACEMENT

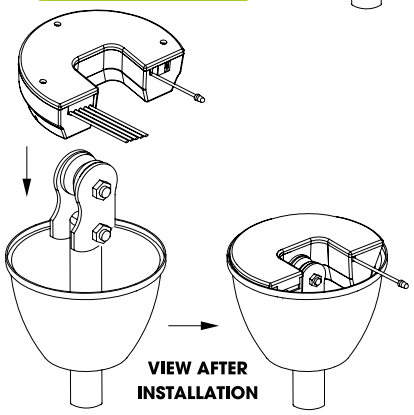

WIRING DIAGRAM

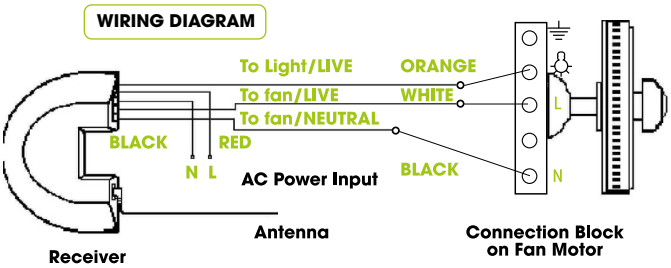

IMPORTANT POINTS

1. **Caution:** Do not use this product in conjunction with any wall/speed regulator.
2. Please note that all fixed wiring appliances should be installed by a qualified electrician.
3. The supply to the remote control receiver should be connected through a mains switch, i.e. existing wall switch.
4. Disconnect from power supply at wall switch before working on remote control receiver or ceiling fan.
5. This unit is to be used for the control of ceiling fans and in an AC230/240V 50Hz power supply only.
6. The remote receiver must be used within its load rating of 100 watt maximum.
7. Do not install in damp locations or immerse into water. (For indoor use only.)
8. The batteries will weaken with age and should be replaced before leaking takes place as this will damage the transmitter.

Overload Protection for Fan Motor

If your fan or light suddenly goes off, check the protection fuses.

8.20